POWERED BY ENDURA
DOOR COMPONENTS MADE IN THE USA

Ultimate Flip Lever Astragal

INSWING / OUTSWING
"NON-IMPACT"

GENERAL NOTES

1. This product has been evaluated and is in compliance with the 8th Edition (2023) Florida Building Code (FBC) structural requirements excluding the "High Velocity Hurricane Zone" (HVHZ).
2. Product anchors shall be as listed and spaced as shown on details. Anchor embedment to base material shall be beyond wall dressing or stucco.
3. When used in areas requiring wind borne debris protection this product is required to be protected with an impact resistant covering that complies with FBC Sections 1609.1.2 & R301.2.1.2.
4. For 2x stud framing construction, anchoring of these units shall be the same as that shown for 2x buck masonry construction.
5. This product has been tested and is approved for use in the door panels as specified in this approval. Substitution into a similar product that possess a comparable current Florida Statewide product approval may be approved for use by the local Authority Having Jurisdiction.
6. Site conditions that deviate from the details of this drawing require further engineering analysis by a licensed engineer or registered architect.

TABLE OF CONTENTS

SHEET#	DESCRIPTION
1	Typical elevations, design pressures and general notes
2	Astragal details
3	Door panel details
4	Horizontal and vertical cross sections
5	Threshold details
6	Buck and frame anchoring

Ultimate Flip Lever Astragal

L. F. SCHMIDT LICENSE No. 43409 STATE OF FLORIDA PROFESSIONAL ENGINEER

Digitally signed by Lyndon F Schmidt
Date: 2024.04.17 16:07:50 -04'00'

This item has been digitally signed and sealed by **L. F. Schmidt, P.E.** on the date adjacent to the seal.

Printed copies of this document are not considered signed and sealed and the signature must be verified on any electronic copies.

THIS PRODUCT APPROVAL IS VALID ONLY FOR THE STATE OF FLORIDA

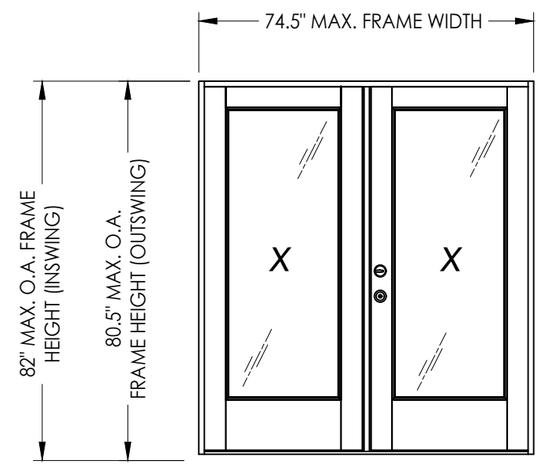

ULTIMATE FLIP LEVER ASTRAGAL by ENDURA

MAXIMUM FRAME SIZE			DESIGN PRESSURE RATING (PSF)	
			POSITIVE	NEGATIVE
MASONITE Flush Glazed (FIBERGLASS)	INSWING	74.5" X 82"	+45.0	-45.0
	OUTSWING	74.5" X 80.5"	+45.0	-45.0

Documents Prepared By:
Lyndon F. Schmidt
P.E. No. 43409

R.W. BUILDING CONSULTANTS, INC.
P.O. Box 230, Valrico, FL 33595
Phone No.: 813.659.9197
FBPE Registry No. 9813

PRODUCT: ENDURA

PART OR ASSEMBLY: TYPICAL ELEVATIONS, DESIGN PRESSURES & GENERAL NOTES

NO.	DATE	REVISIONS	BY
7	4/16/24	ADD MODERN ASTRAGAL PROFILE	LFS
6	7/07/23	UPDATE TO 8TH ED. (2023) FBC	LFS
5	8/11/20	UPDATE TO 7TH ED. (2020) FBC	LFS
4	9/27/17	UPDATE TO 6TH ED. (2017) FBC	LFS

DATE: 8/30/11
SCALE: N.T.S.
DWG. BY: JK
CHK. BY: LFS
DRAWING NO.: FL-14823.4
SHEET 1 OF 6

© 2011 R.W. BUILDING CONSULTANTS INC.

G:\2023 FBC DWGS\Endura Products\FL-14823 R13\FL-14823.2-4,6-9.dwg

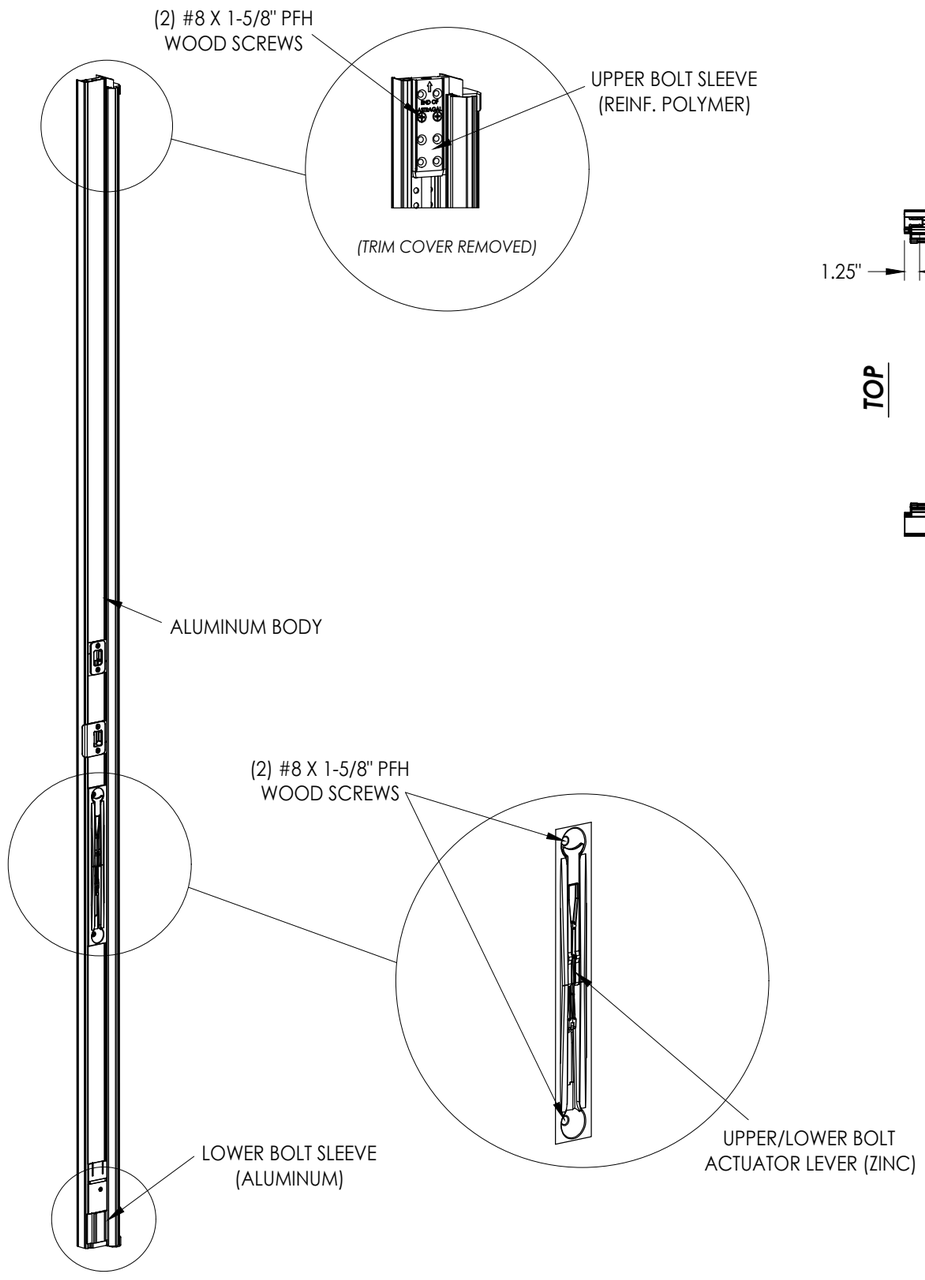

ULTIMATE FLIP LEVER ASTRAGAL

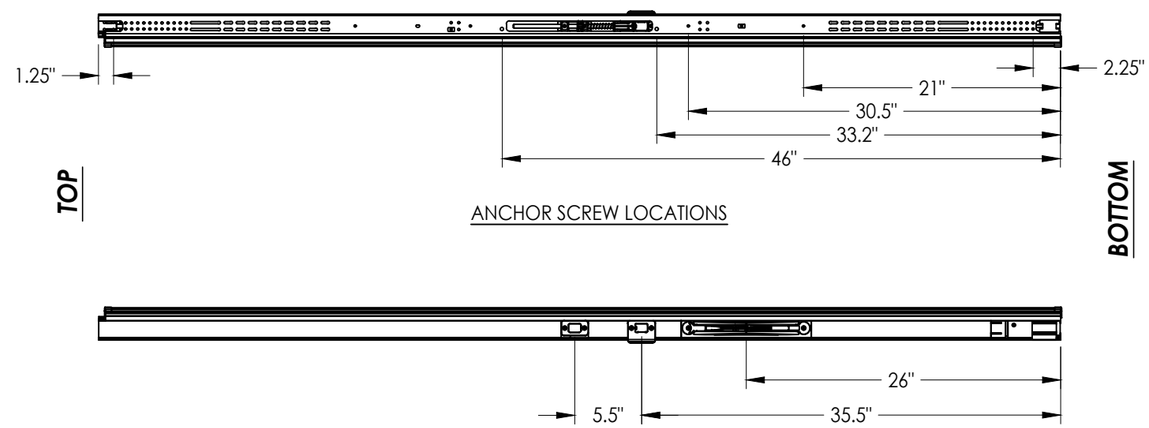

ANCHOR SCREW LOCATIONS

HARDWARE LOCATIONS

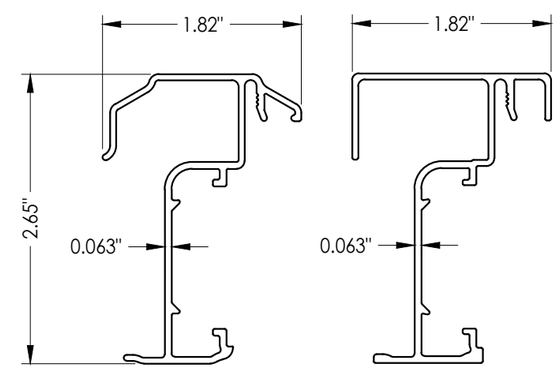

"TRADITIONAL" PROFILE "MODERN" PROFILE

ASTRAGAL SECTIONS

Documents Prepared By:
Lyndon F. Schmidt
P.E. No. 43409
RW BUILDING CONSULTANTS, INC.
P.O. Box 230, Valrico, FL 33595
Phone No.: 813.659.9197
FBPE Registry No. 9813

PRODUCT: ENDURA

PART OR ASSEMBLY: ASTRAGAL DETAILS

NO.	DATE	REVISIONS	BY
7	4/16/24	ADD MODERN ASTRAGAL PROFILE	LFS
6	7/07/23	UPDATE TO 8TH ED. (2023) FBC	LFS
5	8/11/20	UPDATE TO 7TH ED. (2020) FBC	LFS
4	9/27/17	UPDATE TO 6TH ED. (2017) FBC	LFS

DATE: 8/30/11
SCALE: N.T.S.
DWG. BY: JK
CHK. BY: LFS
DRAWING NO.: FL-14823.4
SHEET 2 OF 6

© 2011 R.W. BUILDING CONSULTANTS INC.

G:\2023 FBC DWGS\Endura Products\FL-14823 R13\FL-14823.2-4,6-9.dwg

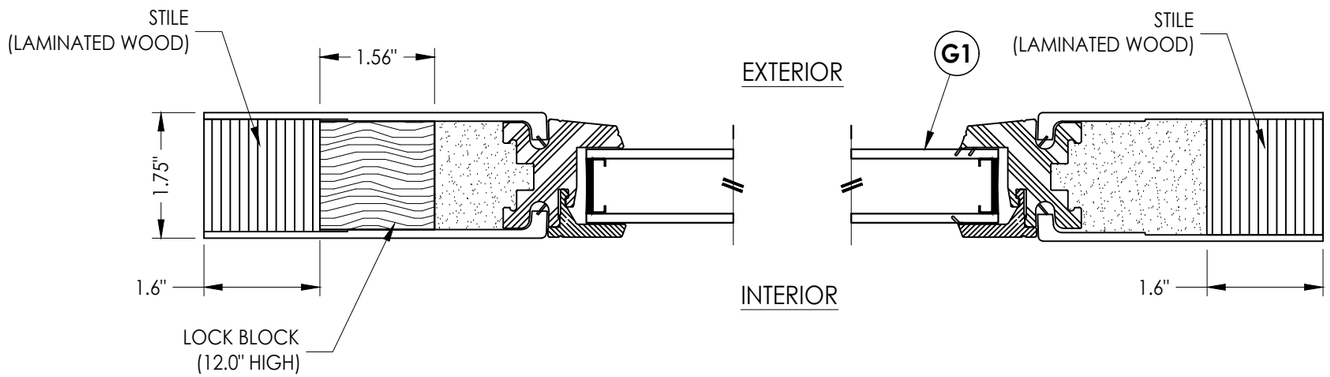

1/3 **HORIZONTAL CROSS SECTION**

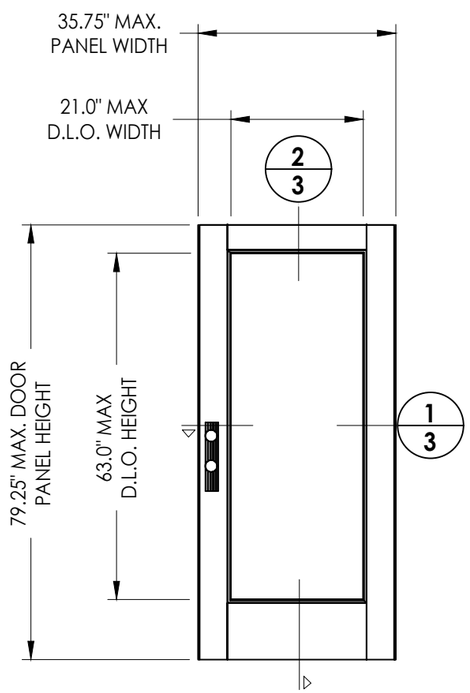

MASONITE
Flush glazed
(fiberglass)

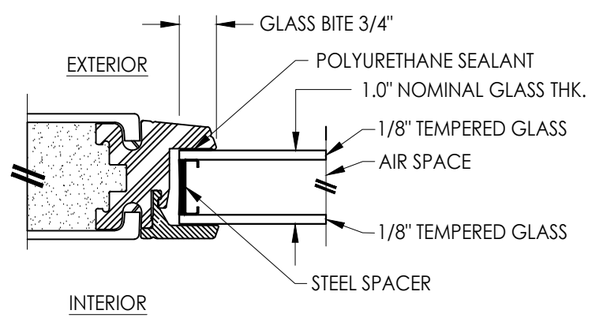

G1 **GLAZING DETAIL**
Flush Glazing

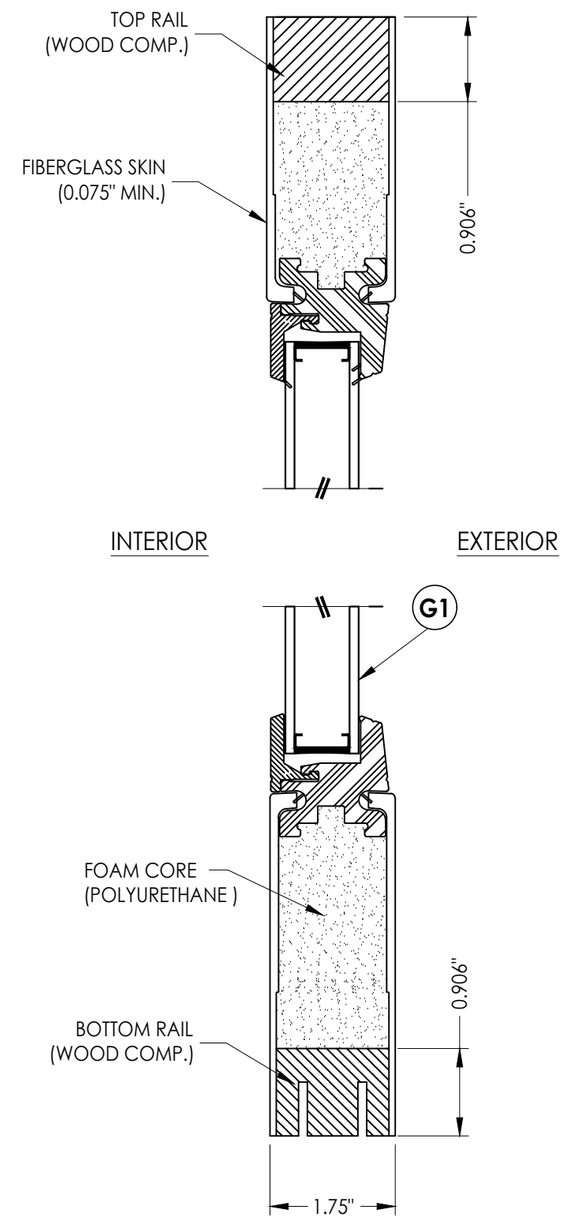

2/3 **VERTICAL CROSS SECTION**

Documents Prepared By:
Lyndon F. Schmidt
P.E. No. 43409

RW BUILDING CONSULTANTS, INC.
P.O. Box 230, Valrico, FL 33595
Phone No.: 813.659.9197
FBPE Registry No. 9813

PRODUCT: ENDURA

PART OR ASSEMBLY: DOOR PANEL DETAILS & GLAZING DETAIL

REVISIONS

NO.	DATE		BY
7	4/16/24	ADD MODERN ASTRAGAL PROFILE	LFS
6	7/07/23	UPDATE TO 8TH ED. (2023) FBC	LFS
5	8/11/20	UPDATE TO 7TH ED. (2020) FBC	LFS
4	9/27/17	UPDATE TO 6TH ED. (2017) FBC	LFS

DATE: 8/30/11
SCALE: N.T.S.
DWG. BY: JK
CHK. BY: LFS
DRAWING NO.: FL-14823.4
SHEET 3 OF 6

© 2011 R.W. BUILDING CONSULTANTS INC.

G:\2023 FBC DWGS\Endura Products\FL-14823 R13\FL-14823.2-4,6-9.dwg

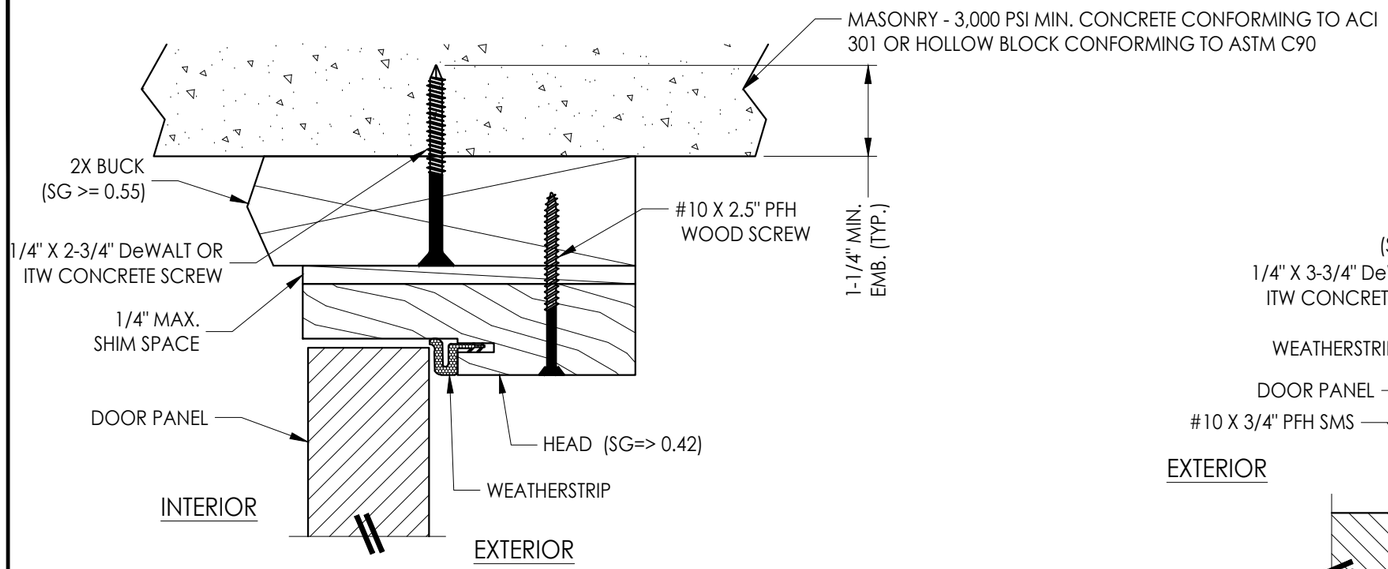

1/4 **VERTICAL CROSS SECTION**

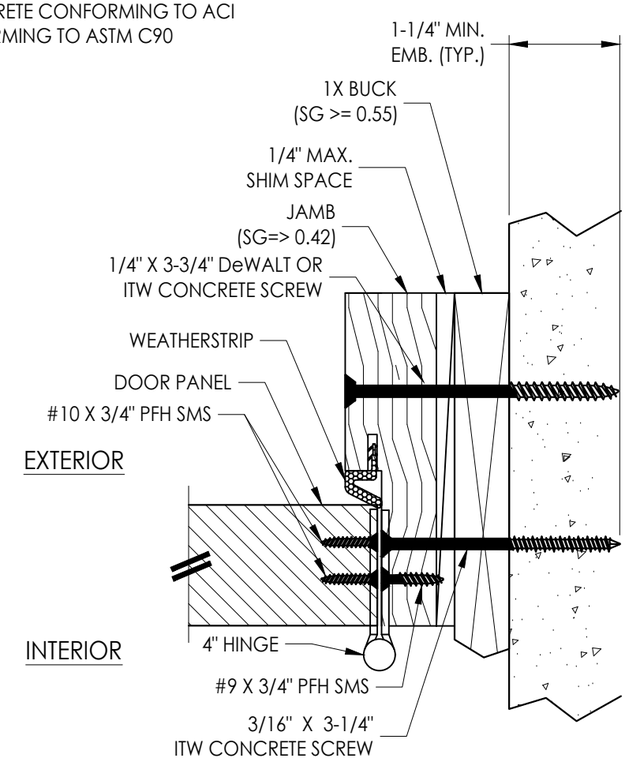

4/4 **HORIZONTAL CROSS SECTION**
Shown w/1X sub-buck

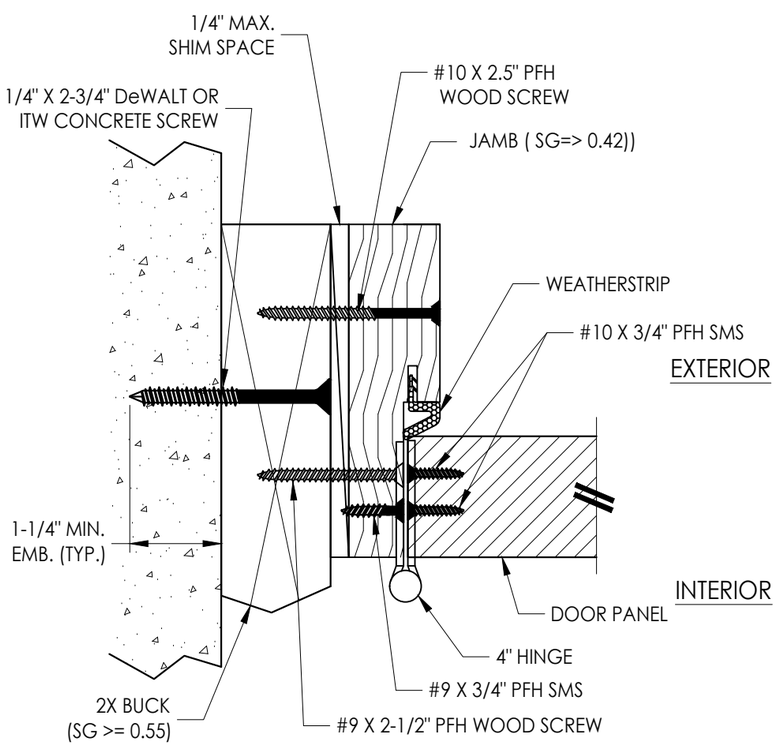

2/4 **HORIZONTAL CROSS SECTION**

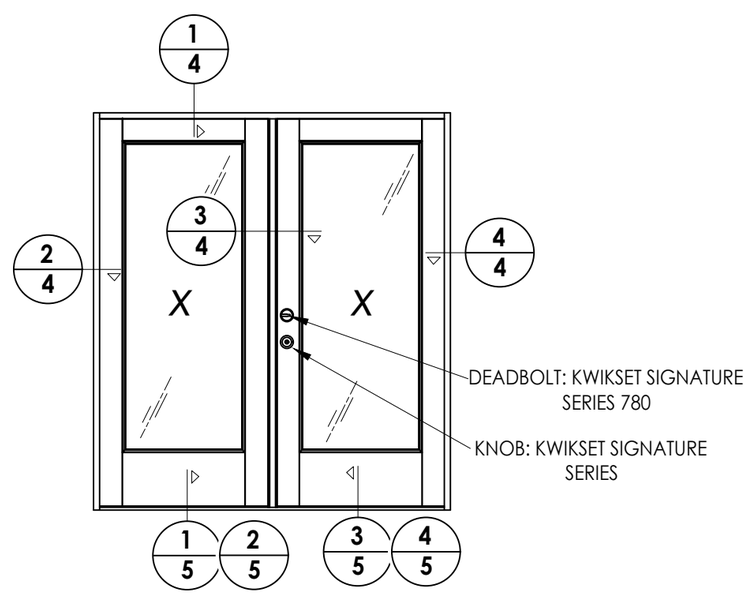

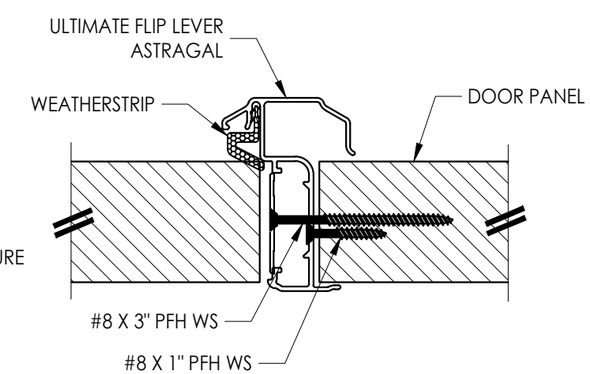

3/4 **HORIZONTAL CROSS SECTION**

Documents Prepared By:
Lyndon F. Schmidt
P.E. No. 43409

RW BUILDING CONSULTANTS, INC.
P.O. Box 230, Valrico, FL 33595
Phone No.: 813.659.9197
FBPE Registry No. 9813

PRODUCT: ENDURA

PART OR ASSEMBLY: HORIZONTAL AND VERTICAL CROSS SECTIONS

REVISIONS

NO.	DATE		BY
7	4/16/24	ADD MODERN ASTRAGAL PROFILE	LFS
6	7/07/23	UPDATE TO 8TH ED. (2023) FBC	LFS
5	8/11/20	UPDATE TO 7TH ED. (2020) FBC	LFS
4	9/27/17	UPDATE TO 6TH ED. (2017) FBC	LFS

DATE: 8/30/11
SCALE: N.T.S.
DWG. BY: JK
CHK. BY: LFS
DRAWING NO.: FL-14823.4
SHEET 4 OF 6

© 2011 R.W. Building Consultants Inc.

G:\2023 FBC DWGS\Endura Products\FL-14823 R13\FL-14823.2-4,6-9.dwg

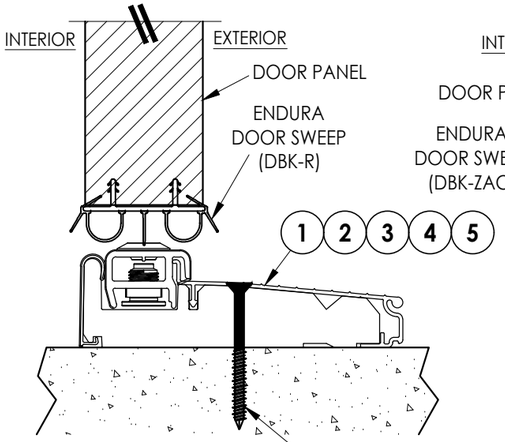

1/5 VERTICAL CROSS SECTION
Inswing Adjustable Threshold

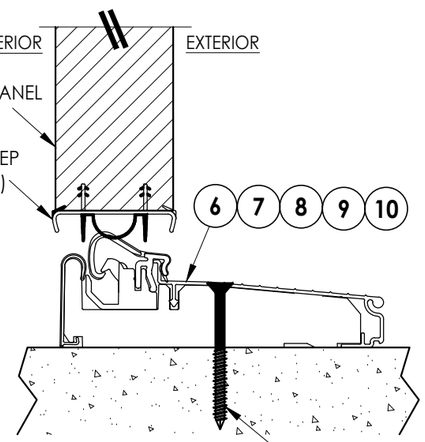

2/5 VERTICAL CROSS SECTION
Inswing Articulating Threshold
w/ Pin CAPture

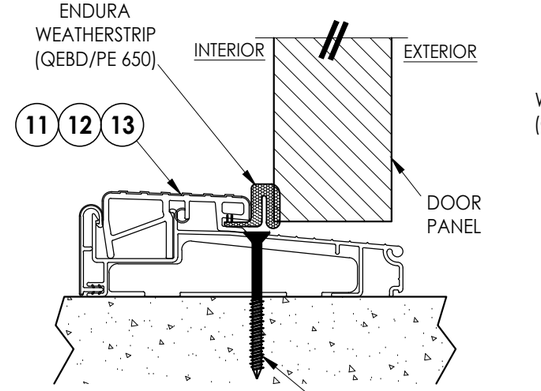

3/5 VERTICAL CROSS SECTION
Outswing Bump Threshold

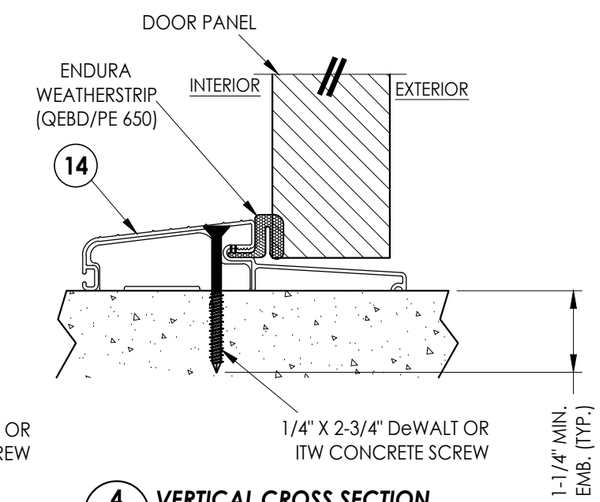

4/5 VERTICAL CROSS SECTION
Outswing Bump Threshold

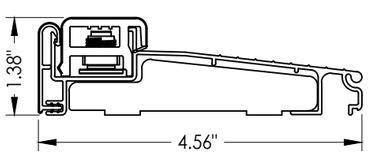

1 INSWING ADJUSTABLE THRESHOLD
ZAIL4565

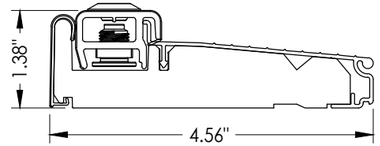

2 INSWING ADJUSTABLE THRESHOLD
ZAI4565FN

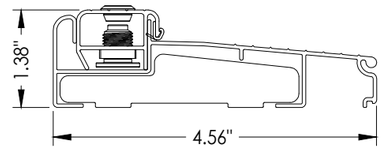

3 INSWING ADJUSTABLE THRESHOLD
ZAILAA4565

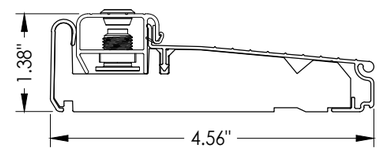

4 INSWING ADJUSTABLE THRESHOLD
ZAIAA4565FN

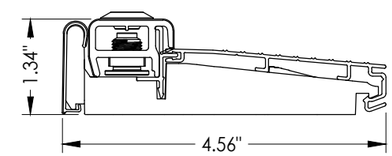

5 INSWING ADJUSTABLE THRESHOLD
ZAI4565RDS

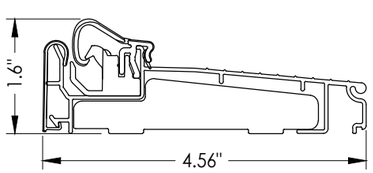

6 INSWING ARTICULATING THRESHOLD
ZACL4565

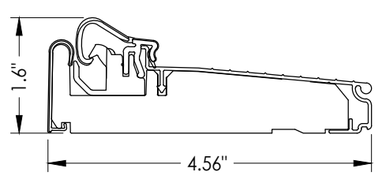

7 INSWING ARTICULATING THRESHOLD
ZAC4565FN

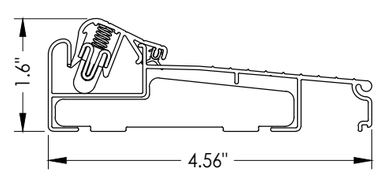

8 INSWING ARTICULATING THRESHOLD
ZACLAA4565

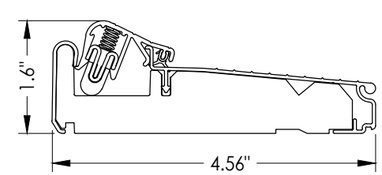

9 INSWING ARTICULATING THRESHOLD
ZACAA4565FN

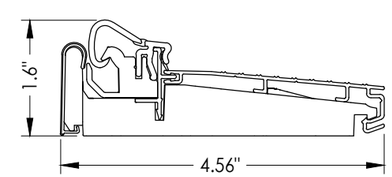

10 INSWING ARTICULATING THRESHOLD
ZAC4565RDS

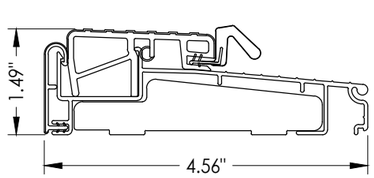

11 OUTSWING THRESHOLD
ZOBL4565

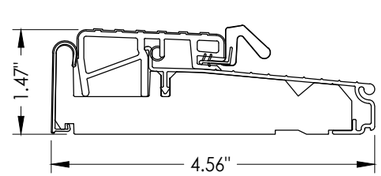

12 OUTSWING THRESHOLD
ZOB4565FN

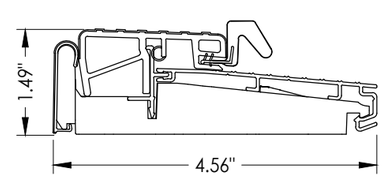

13 OUTSWING THRESHOLD
ZOB4565RDS

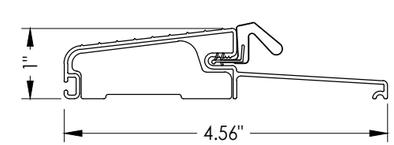

14 OUTSWING THRESHOLD
FOB4566

Documents Prepared By:
Lyndon F. Schmidt
P.E. No. 43409

RW BUILDING CONSULTANTS, INC.
P.O. Box 230, Valrico, FL 33595
Phone No.: 813.659.9197
FBPE Registry No. 9813

PRODUCT: ENDURA

PART OR ASSEMBLY: THRESHOLD DETAILS

REVISIONS

NO.	DATE		BY
7	4/16/24	ADD MODERN ASTRAGAL PROFILE	LFS
6	7/07/23	UPDATE TO 8TH ED. (2023) FBC	LFS
5	8/11/20	UPDATE TO 7TH ED. (2020) FBC	LFS
4	9/27/17	UPDATE TO 6TH ED. (2017) FBC	LFS

DATE: 8/30/11
SCALE: N.T.S.
DWG. BY: JK
CHK. BY: LFS
DRAWING NO.: FL-14823.4
SHEET 5 OF 6

© 2016 R.W. Building Consultants Inc.

G:\2023 FBC DWGS\Endura Products\FL-14823 R13\FL-14823.2-4,6-9.dwg

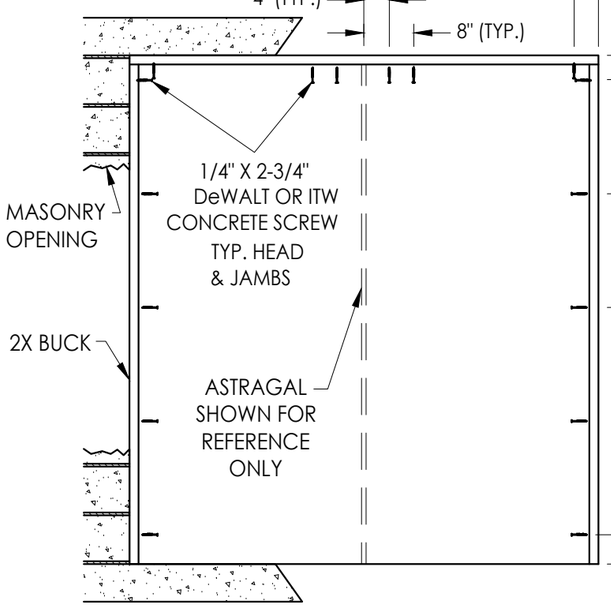

BUCK ANCHORING
XX

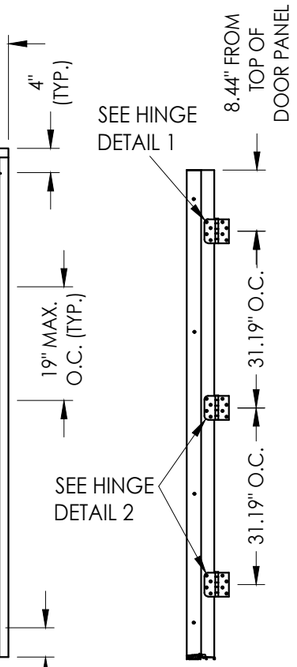

HINGE JAMB

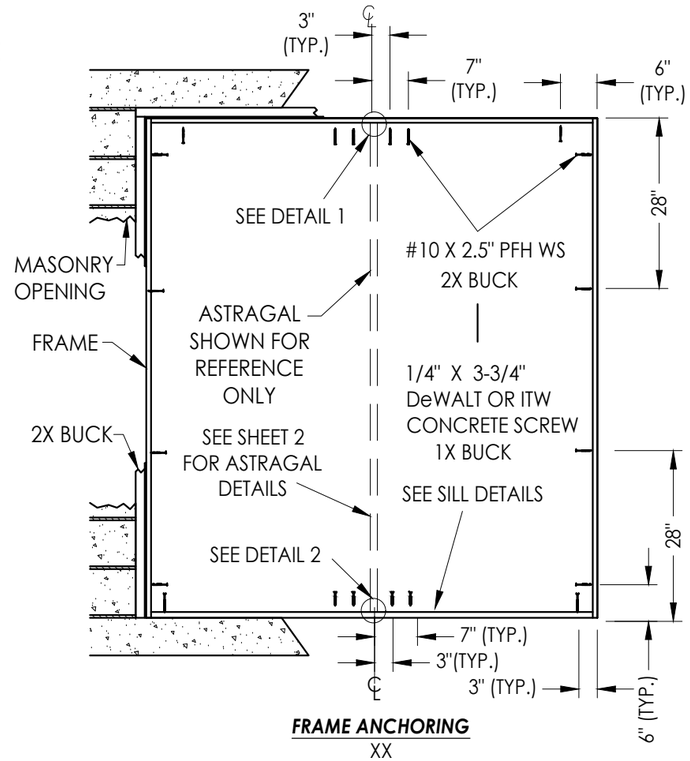

FRAME ANCHORING
XX

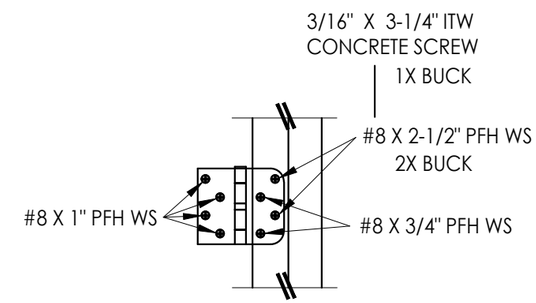

HINGE DETAIL 1

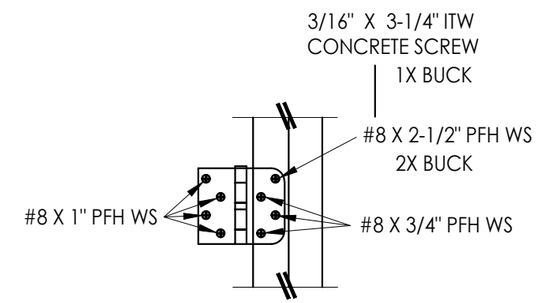

HINGE DETAIL 2

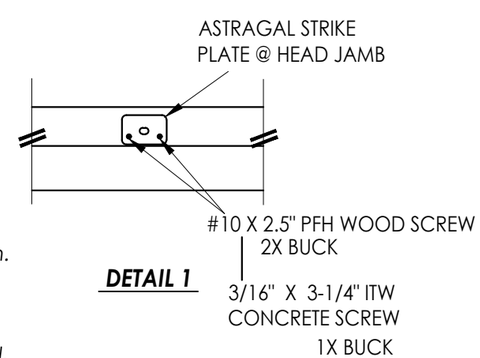

DETAIL 1

CONCRETE ANCHOR NOTES:

1. *Concrete anchor locations at the corners may be adjusted to maintain the min. edge distance to mortar joints.*
2. *Concrete anchor locations noted as "MAX. ON CENTER" must be adjusted to maintain the min. edge distance to mortar joints, additional concrete anchors may be required to ensure the "MAX. ON CENTER" dimension are not exceeded.*
3. *Concrete anchor table:*

ANCHOR TYPE	ANCHOR SIZE	MIN. EMBEDMENT	MIN. CLEARANCE TO MASONRY EDGE	MIN. CLEARANCE TO ADJACENT ANCHOR
ITW TAPCON®	3/16"	1-1/4"	3"	1-1/2"
	1/4"	1-1/4"	2"	4"
DeWALT ULTRACON+®	1/4"	1-1/4"	1"	4"

WOOD SCREW INSTALLATION NOTES:

1. *Maintain a minimum 5/8" edge distance, 1" end distance, & 1" o.c. spacing of wood screws to prevent the splitting of wood.*

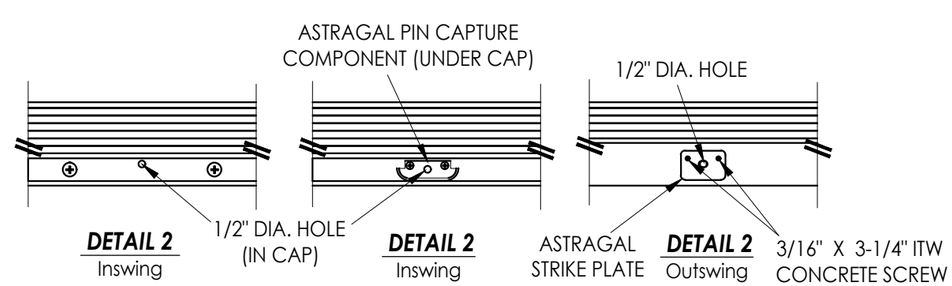

DETAIL 2 Inswing

DETAIL 2 Inswing

DETAIL 2 Outswing

Documents Prepared By:
Lyndon F. Schmidt
P.E. No. 43409

RW BUILDING CONSULTANTS, INC.
P.O. Box 230, Valrico, FL 33595
Phone No.: 813.659.9197
FBPE Registry No. 9813

PRODUCT: *ENDURA*

PART OR ASSEMBLY: *BUCK AND FRAME ANCHORING*

REVISIONS

NO.	DATE		BY
7	4/16/24	ADD MODERN ASTRAGAL PROFILE	LFS
6	7/07/23	UPDATE TO 8TH ED. (2023) FBC	LFS
5	8/11/20	UPDATE TO 7TH ED. (2020) FBC	LFS
4	9/27/17	UPDATE TO 6TH ED. (2017) FBC	LFS

DATE: 8/30/11
SCALE: N.T.S.
DWG. BY: JK
CHK. BY: LFS
DRAWING NO.: FL-14823.4
SHEET 6 OF 6

© 2011 R.W. BUILDING CONSULTANTS INC.

G:\2023 FBC DWGS\Endura Products\FL-14823 R13\FL-14823.2-4,6-9.dwg